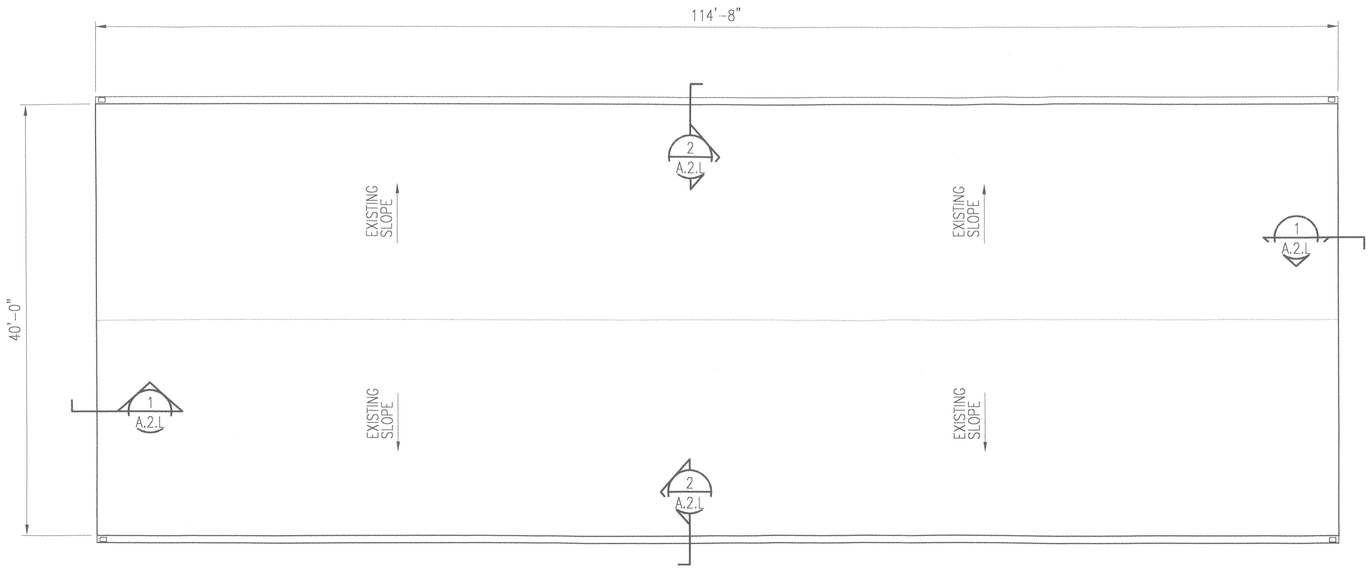

BUILDING TYPE "L"
SCALE: 1/8" = 1'-0"

FOR BUILDINGS IDENTIFIED TO BE RE-ROOFED REFER TO LIST ON COVER SHEET T-1

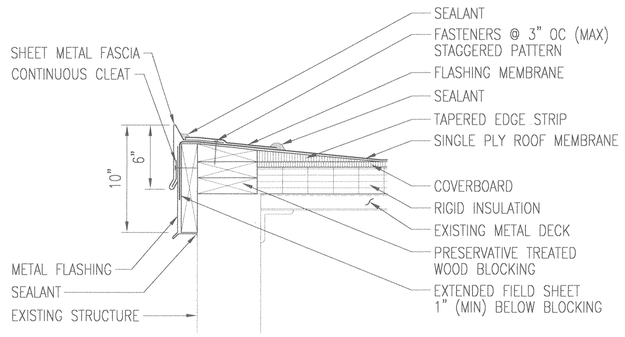

ROOF EDGE FLASHING (1 / A.2.L)
SCALE: 1 1/2"= 1'-0"

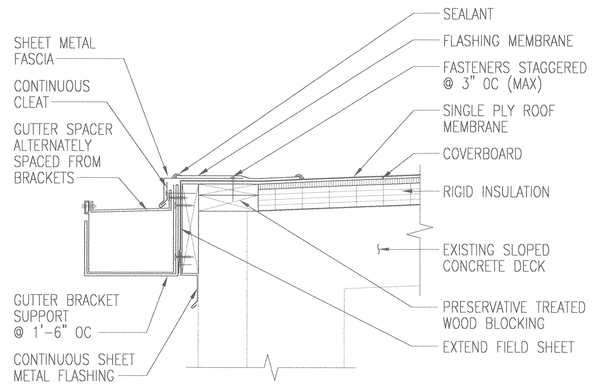

ROOF EDGE FLASHING w/GUTTER (2 / A.2.L)
SCALE: 1 1/2"= 1'-0"

LEGEND: (NOT ALL SYMBOLS INDICATED BELOW ARE APPLICABLE)

- VENT THRU ROOF (VTR)
- DOWNSPOUT
- ROOF FAN
- ISOLATED STACK
- GOOSENECK DUCT
- RD ROOF DRAIN
- ROOF VENTILATOR

SCHEDULE FOR BUILDING COMPONENTS			
Bldg No.	Exist Ballast to be Removed	Downspouts	
		Quantity	LF/ea.
5720	Yes	4	15'-0"

GENERAL NOTES:

1. PLAN ORIENTATION AND PENETRATION LOCATIONS ON DRAWING REPRESENTS A TYPICAL CONDITION. VARIOUS BUILDINGS MAY BE OPPOSITE HAND FROM WHAT IS SHOWN. PENETRATION LOCATIONS MAY VARY FROM WHAT IS SHOWN.
2. DIMENSIONS ON DRAWINGS HAVE BEEN DERIVED FROM EXISTING CONSTRUCTION DRAWINGS AND A VISUAL SITE INSPECTION. CONTRACTOR SHALL VERIFY ALL DIMENSIONS, ELEVATIONS AND CONDITIONS IN THE FIELD, PRIOR TO PROCEEDING WITH ANY WORK. THE CONTRACTOR SHALL REPORT ANY DISCREPANCIES TO THE OWNERS REPRESENTATIVE IMMEDIATELY. DRAWINGS SHALL NOT BE SCALED TO OBTAIN WORKING DIMENSIONS, UNLESS NOTED OTHERWISE.
3. CONTRACTOR SHALL BE RESPONSIBLE FOR ANY DAMAGE TO EXISTING STRUCTURE, EQUIPMENT AND BUILDING CONTENTS DURING CONSTRUCTION, INCLUDING DAMAGE FROM THE ELEMENTS. CONTRACTOR SHALL REPAIR OR REPLACE, AT NO EXTRA COST TO THE OWNER ANY DAMAGE DURING CONSTRUCTION.
4. CONTRACTOR SHALL COORDINATE WITH OWNERS REPRESENTATIVE FOR EXTENT OF PARKING AND STAGING AREA.
5. CONTRACTOR SHALL COORDINATE EXACT QUANTITY, SIZE AND LOCATION OF PIPE, VENT AND DUCT PENETRATIONS THROUGHOUT ROOF STRUCTURE WITH ACTUAL LOCATIONS AND SIZES IN THE FIELD. SEE ROOF PLANS FOR APPROXIMATE LOCATIONS.
6. CONTRACTOR SHALL PROVIDE ALL MATERIALS, EQUIPMENT AND LABOR REQUIRED FOR A COMPLETE AND WEATHER TIGHT SYSTEM. ALL MATERIALS SHALL BE NEW UNLESS INDICATED AS EXISTING TO REMAIN OR EXISTING TO BE REINSTALLED.
7. PROVIDE PROTECTION AT EXISTING ROOF DRAINS DURING CONSTRUCTION TO PREVENT DEBRIS FROM COLLECTING OR FALLING INTO LEADERS. PROTECTION SHALL NOT OBSTRUCT ROOF DRAIN DURING INCLEMENT WEATHER. NEW CAST IRON DRAIN STRAINERS SHALL BE PROVIDE FOR ALL EXISTING ROOF DRAINS.
8. EXISTING ROOF STRUCTURES SLOPE TO EDGES OR DRAINS. VERIFY THAT POSITIVE SLOPE EXISTS AFTER ROOF REMOVAL. IF CONDITION IS OTHERWISE NOTIFY OWNER'S REPRESENTATIVE PRIOR TO PROCEEDING WITH NEW INSTALLATION.
9. ALL UNCOVERED AND EXPOSED WOOD BLOCKING SHALL BE REPLACED WITH NEW WOOD BLOCKING AS REQUIRED FOR THE NEW ROOFING. ALL WOOD BLOCKING SHALL BE NEW PRESERVATIVE TREATED WOOD. EXISTING BOLTS THAT CONNECT WOOD BLOCKING TO STRUCTURE ARE NOT TO BE REUSED UNLESS SPECIFICALLY APPROVED BY THE OWNERS REPRESENTATIVE. ALL WOOD BLOCKING SHALL BE FASTENED WITH GALVANIZED ANCHORS UNLESS NOTED OTHERWISE.
10. DOWN SPOUTS ARE INTENDED TO BE REPLACED AT THE SAME LOCATION AS EXISTING DOWN SPOUT LOCATIONS. PROVIDE SPLASH BLOCKS AT ALL DOWN SPOUT LOCATIONS THAT DISCHARGE ONTO GRADE.
11. ANY ROOFS NOT SHOWN ON PLANS ARE "NOT IN CONTRACT" AND SHALL REMAIN UNDISTURBED & PROTECTED DURING ROOF REPLACEMENTS.
12. EXISTING ROOF EQUIPMENT IS INTENDED TO REMAIN IN PLACE WITH NEW COUNTER FLASHING INSTALLED TO INTEGRATE WITH EXISTING EQUIPMENT FLASHING. A MINIMUM MEMBRANE FLASHING HEIGHT OF 8" SHALL BE MAINTAINED.

GENERAL DEMOLITION NOTES:

1. REMOVE EXISTING ROOF SYSTEM IN IT'S ENTIRETY DOWN TO THE EXISTING METAL DECK OR CONCRETE STRUCTURE UNLESS NOTED OTHERWISE. DEMOLITION SHALL INCLUDE, BUT NOT BE LIMITED TO, ALL INSULATION, VAPOR BARRIERS, FLASHING, FASTENERS, ROOF MEMBRANE AND STONE BALLAST. ALL MATERIALS DESIGNATED TO BE REMOVED SHALL BE DEMOLISHED IN A MANNER TO PREVENT DAMAGE TO FINISHES OR MATERIALS TO REMAIN. DAMAGED AREAS OF FINISHES OR MATERIALS THAT ARE TO REMAIN SHALL BE REPAIRED OR REPLACED TO MATCH EXISTING.

   NOTE: EXISTING ROOFING MEMBRANE CONSISTS OF EPDM RETROFITTED OVER BUILT-UP ROOFING.
2. REMOVE EXISTING ROOFING AND FLASHING AROUND EXISTING EQUIPMENT, ROOF HATCHES AND PIPES IN PREPARATION FOR NEW ROOFING SYSTEM.
3. REMOVE EXISTING EDGE FLASHING AND GUTTERS WHERE NEW ARE INDICATED TO BE PROVIDED.

ASBESTOS GENERAL NOTES:

1. ASBESTOS CONTAINING MATERIALS (ACM) ARE REQUIRED TO BE ABATED ON THE FOLLOWING BUILDINGS: 5702, 5703, 5706, 5712, 5745 AND 5833. REFER TO ABATEMENT SPECIFICATIONS FOR CONTRACTORS SCOPE OF WORK.
2. MATERIAL QUANTITY OF ACM IS TO BE DETERMINED BY THE CONTRACTOR FROM DRAWINGS PROVIDED. WHERE DIMENSIONS ARE NOT PROVIDED, CONTRACTOR MAY SCALE THE DRAWINGS.
3. BUILDING 5844 IS QUESTIONABLE WHETHER ABATEMENT OF ACM IS REQUIRED. THE OWNER (FBOP) IS TO PROVIDE A SAMPLE REPORT FOR THIS BUILDING PRIOR TO CONSTRUCTION. THE CONTRACTOR SHALL NOT REMOVE ANY MATERIALS UNTIL THE REPORT IS PROVIDED AND DIRECTION GIVEN.

GRAPHIC SCALE
1/8"=1'-0" 0 5' 10' 15' 20'
1 1/2"=1'-0" 0 1'

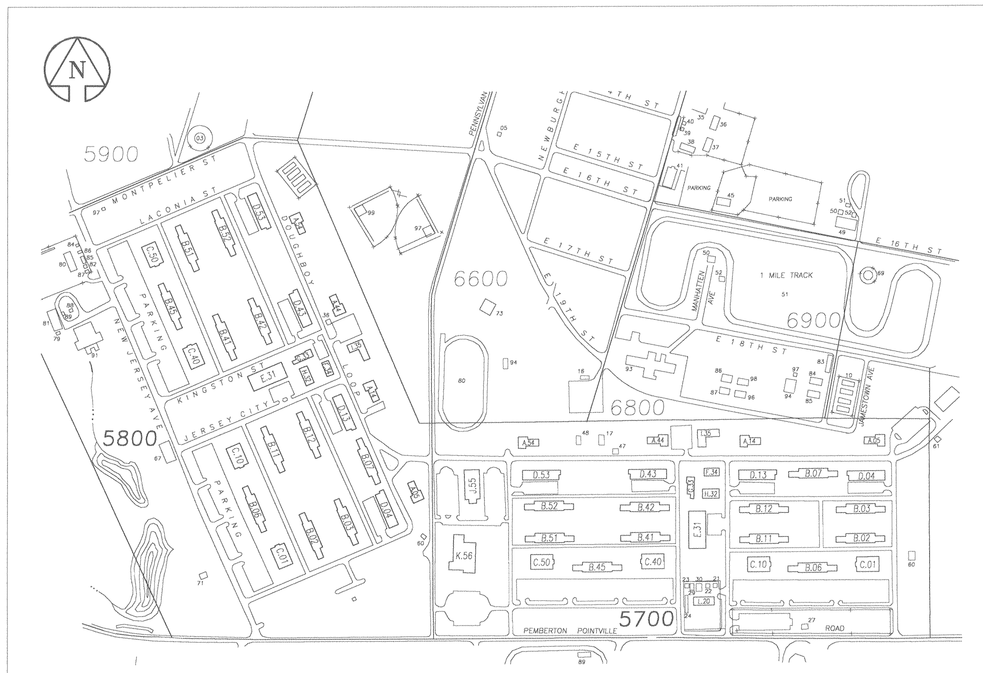

Site Plan
N.T.S.

U.S. DEPARTMENT OF JUSTICE
FEDERAL BUREAU OF PRISONS
NORTHEAST REGION
INSTITUTION

APPROVAL SCHEDULE	
TITLE	DATE
WARDEN	
A.W. OPERATIONS	
A.W. PROGRAMS	
A.W. MEDICAL	
W.P.C.C.	
FACILITIES MANAGER	
DEPARTMENT HEAD	
SAFETY MANAGER	
CAPTAIN	
SECURITY OFFICER	

Sheet Title: ROOF PLAN - BUILDING TYPE "L"

Project Title: ROOF REPLACEMENT FCI FORT DIX, NEW JERSEY

PROJECT # 10108
Drawn By: R. RUPERT
Checked By: J. Tornetta
Date: Jan. 5, 2004

REVISIONS:	
No.	Date

Sheet No. A.2.L of 10 sheets

I:\PROJECTS\10108\Task 11\Phase 2\TYPE L.dwg BradtCD 1/6/2004 3:03:30 PM