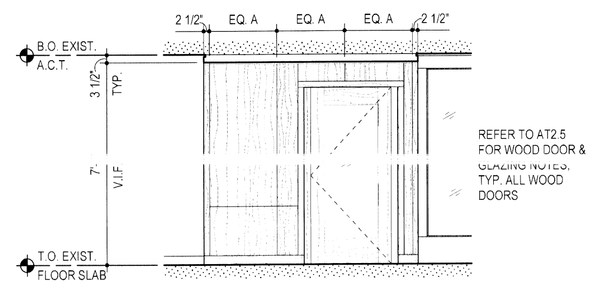

I. SECTION / ELEVATION

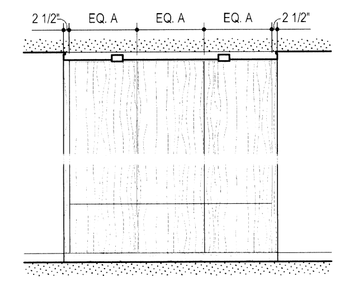

II. SECTION / ELEVATION

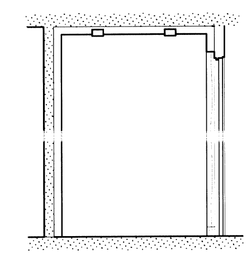

III. SECTION

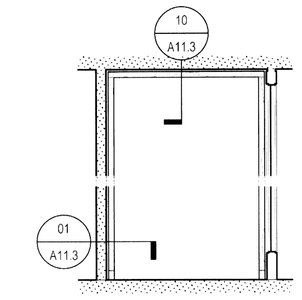

IV. ELEVATION

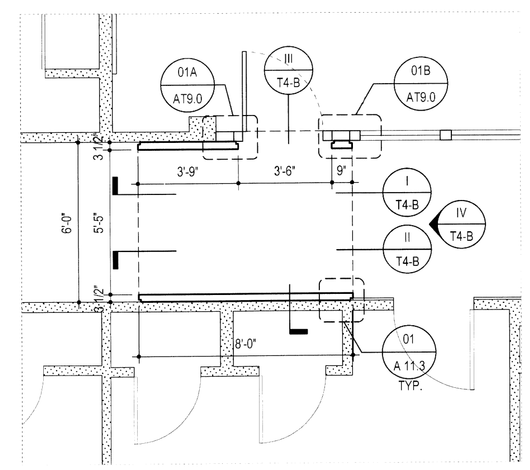

DETAIL PLAN

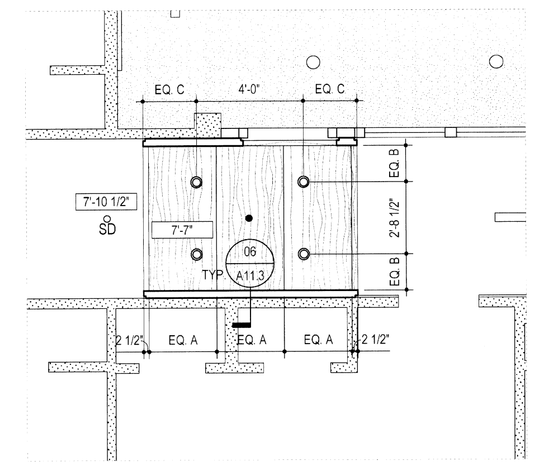

DETAIL RCP

PORTAL T4-B 02

SCALE = 1/4" = 1'-0" AT 9.2E

PORTAL NOTES:

1. ALIGN PORTAL CEILING JOINTS WITH PORTAL WALL JOINTS AS SHOWN, TYP.

2. CONTRACTOR TO NOTIFY ARCHITECT OF UNDOCUMENTED DEVICES OR M.E.P. / F.P. INFRASTRUCTURE WITHIN PORTALS.

3. MOUNT EXISTING / NEW M.E.P. & F.P. DEVICES IN PORTALS AS SHOWN. DEVICES SHALL BE CENTERED WITHIN THEIR ASSOCIATED WOOD PANELS, TYP. SEE MEP/FP DWGS FOR MOUNTING HEIGHTS. ALL OTHER DIMS & LOCATIONS AS PER ARCHITECTURAL DWGS.

4. CORK PLANK FLOORING AT PORTALS ONLY.

5. COORD. EXACT LOCATION OF SPRINKLER PENDANTS IN FIELD. CUT HOLES IN FIELD. LOCATE NEW PENDANTS IN CENTER OF CEILING PANELS -OR- ON JOINTS AS INDICATED ON DRAWINGS, TYP.

6. LAYOUT PORTAL LIGHT FIXTURES AS PER ARCHITECTURAL DRAWINGS.

7. REFER TO ELEVATIONS ON AL9.24 OR AT9.24 FOR MORE DETAILED MATERIAL NOTES, TYP.

8. REFER TO DETAIL 04 / A11.3 FOR WORK POINT INFORMATION AT DOOR JAMBS!

9. REFER TO ELECTRICAL DRAWINGS FOR SCOPE OF WORK REGARDING THE DEMO / EXIST-TO-REMAIN FOR BLANKED-OFF JUNCTION BOXES. IF JUNCTION BOX MUST REMAIN, PROVIDE PORTAL CABINET AS PER DETAIL 08 / A11.3 TYP. FOR ALL JB'S.

DEVICE LEGEND:

F.E.	FIRE EXTINGUISHER
EXIT	WALL MOUNT EXIT SIGN
EXIT	CEILING MOUNT EXIT SIGN
S	FIRE ALARM STROBE
PS	PULL STATION
JB	JUNCTION BOX
	LIGHT SWITCH
	L.E.D. CEILING FIXTURE (R1)
	RECESSED SPRINKLER HEAD

MATERIALS LEGEND:

	EXISTING CONSTRUCTION / STRUCTURE TO REMAIN
	VERTICAL WOOD GRAIN
	HORIZONTAL WOOD GRAIN

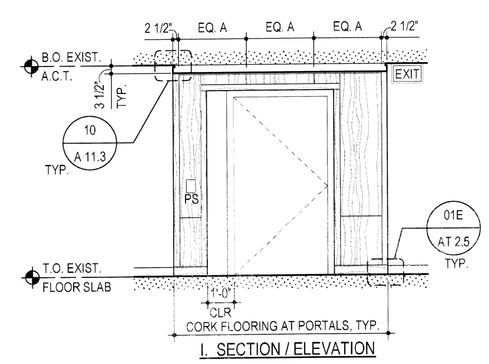

I. SECTION / ELEVATION

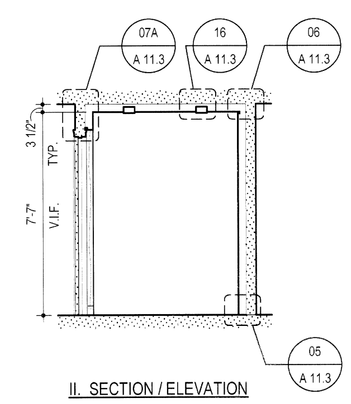

II. SECTION / ELEVATION

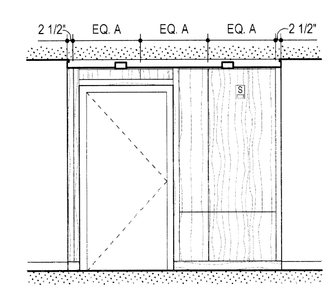

III. SECTION / ELEVATION

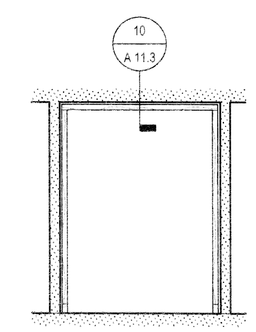

IV. ELEVATION

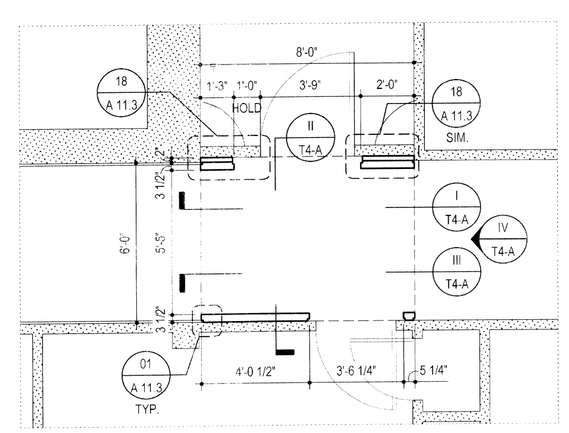

DETAIL PLAN

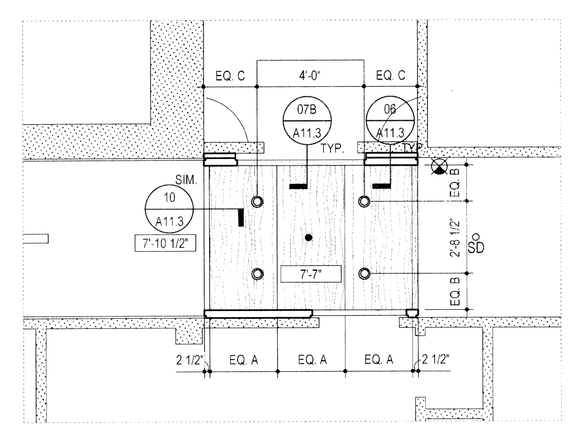

DETAIL RCP

PORTAL T4-A 01

SCALE = 1/4" = 1'-0" AT 9.2E

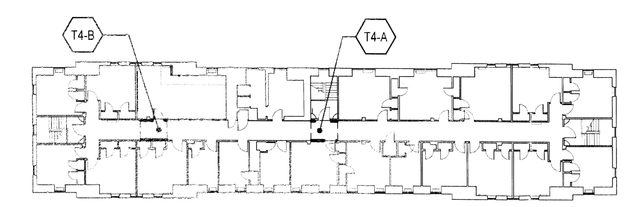

KEY PLAN - THATCHER

0 5 10 15 FT 1/4" = 1' - 0"

23 MARCH 2011

REV. NO.	DESCRIPTION	BY	APP'D	DATE

UMASS

UNIVERSITY OF MASSACHUSETTS
FACILITIES PLANNING DIVISION

LEWIS HALL & THATCHER HALL
FINISH UPGRADE 2011

THATCHER PORTALS - FOURTH FLOOR

	BY	DATE
DRN.	BMW	
APP'D	ASL	
CKD.		
APP'D		

PROJECT NO. 10-00176501
CONTRACT NO. UMA 10-01D
SCALE 1/4" = 1'-0"
SHEET OF
DRAWING NUMBER THATCHER
AT 9.2E

© 2011 LEERS WEINZAPFEL ASSOCIATES ARCHITECTS INC.