PANELBOARD: MDP (EXISTING - THATCHER)

BUS SIZE: 400 AMPS
VOLTAGE: 208 Y/120V 3PH,4W
NEUTRAL: (X)100% ( )200% ( )NONE
ISOLATED GND BUS: ( )YES (X)NO
SHORT CIR. CURRENT RATING 22K
MAIN: (X)MCB ( )MLO
MCB AMPS: 225
LOCATION: 001A
MOUNTING: SURFACE
TVSS: ( )YES (X)NO
SERVICE RATED: ( )YES (X)NO

DIRECTORY	WATTS OF LOAD L1	L2	L3	CKT BKR AMPS	POLES		CKT BKR AMPS	WATTS OF LOAD L1	L2	L3	DIRECTORY
EXISTING LOAD					1	2					EXISTING LOAD
					3	4					
EXISTING LOAD					5	6					EXISTING LOAD
					7	8					
EXISTING LOAD					9	10					EXISTING LOAD
					11	12					
EXISTING LOAD					13	14					EXISTING LOAD
					15	16					
EXISTING LOAD					17	18					EXISTING LOAD
					19	20					
SPACE					21	22					SPACE
					23	24					
EXISTING LOAD					25	26	100	12718	7860	11812	PANELBOARD "LPKT"
					27	28					
SPACE					29	30					
PANELBOARD "LPLT"	11220	7920	6630	100	31	32					SPARE
					33	34					
SPARE					35	36					SPARE
					37	38					
					39	40					
					41	42					
SUBTOTAL	11220	7920	6630					12718	7860	11812	SUBTOTAL

NOTES:

TOTAL PANEL RECPT LOAD = 0 WATTS

C.B. TYPE
S=SHUNT TRIP G=GFCI
L=LOCK ON C.B. H=HACR C.B.
AF=AFCI

TOTAL WATTS L1: 23938
TOTAL WATTS L2: 15780
TOTAL WATTS L3: 18442
TOTAL WATTS: 58160
TOTAL AMPS @ 100%: 162 AMPS
TOTAL AMPS @ 125%: 202 AMPS

PANELBOARD: LP (EXISTING - THATCHER)

BUS SIZE: 225 AMPS
VOLTAGE: 208 Y/120V 3PH,4W
NEUTRAL: (X)100% ( )200% ( )NONE
ISOLATED GND BUS: ( )YES (X)NO
SHORT CIR. CURRENT RATING 22K
MAIN: (X)MCB ( )MLO
MCB AMPS: 225
LOCATION: 001A
MOUNTING: SURFACE
TVSS: ( )YES (X)NO
SERVICE RATED: ( )YES (X)NO

DIRECTORY	WATTS OF LOAD L1	L2	L3	CKT BKR AMPS	POLES		CKT BKR AMPS	WATTS OF LOAD L1	L2	L3	DIRECTORY
EXISTING LOAD					1	2					EXISTING LOAD
					3	4					
EXISTING LOAD					5	6					EXISTING LOAD
					7	8					
EXISTING LOAD					9	10					EXISTING LOAD
					11	12					
EXISTING LOAD					13	14					EXISTING LOAD
					15	16					
EXISTING LOAD					17	18					EXISTING LOAD
					19	20					
RECPT - CORRIDOR 099B	900			20	21	22	20		1500		HAND DRYER - 106
RECPT - ENTRY 199B		900		20	23	24	20			900	RECPT - EXTERIOR
EF-1T, CUH-1T, CUH-2T			752	20	25	26					EXISTING LOAD
EXISTING LOAD					27	28					EXISTING LOAD
ERU-2T (SUPPLY)			812	20	29	30	15			900	ACC-1, AC-1.1, AC-1.2
ERU-2T (EXHAUST)	812				31	32		900			
EF-2T		1176		20	33	34	20		184		LTG - GERMAN ROOM 107B
SPARE					35	36					SPARE
SPARE					37	38					SPARE
SPARE					39	40					SPARE
SPARE					41	42					SPARE
SUBTOTAL	1712	2076	1564					900	1684	1800	SUBTOTAL

NOTES:

TOTAL PANEL RECPT LOAD = 2700 WATTS

C.B. TYPE
S=SHUNT TRIP G=GFCI
L=LOCK ON C.B. H=HACR C.B.
AF=AFCI

TOTAL WATTS L1: 2612
TOTAL WATTS L2: 3760
TOTAL WATTS L3: 3364
TOTAL WATTS: 9736
TOTAL AMPS @ 100%: 27 AMPS
TOTAL AMPS @ 125%: 34 AMPS

PANELBOARD: LPLT (THATCHER)

BUS SIZE: 100 AMPS
VOLTAGE: 208 Y/120V 3PH,4W
NEUTRAL: (X)100% ( )200% ( )NONE
ISOLATED GND BUS: ( )YES (X)NO
SHORT CIR. CURRENT RATING 22K
MAIN: ( )MCB (X)MLO
MCB AMPS:
LOCATION: 010
MOUNTING: SURFACE
TVSS: ( )YES (X)NO
SERVICE RATED: ( )YES (X)NO

DIRECTORY	WATTS OF LOAD L1	L2	L3	CKT BKR AMPS	POLES		CKT BKR AMPS	WATTS OF LOAD L1	L2	L3	DIRECTORY
SF-1T	420	420		15	1	2	30	2500	2500		RECPT - DRYER - 008
					3	4					
RECPT - DRYER - 008			420	30	5	6	30			2500	RECPT - DRYER - 008
					7	8		2500			
RECPT - DRYER - 008	2500	2500		30	9	10	20G		800		RECPT - WASHER - 008
			2500		11	12	20G			800	RECPT - WASHER - 008
RECPT - WASHER - 008	2500				13	14	20G	800			RECPT - WASHER - 008
RECPT - LAUNDRY 008		800		20G	15	16	20		900		RECPT - LAUNDRY - 008
RECPT - LAUNDRY 008			360	20	17	18	20			50	CARD READER - LAUNDRY 008
SPARE				20	19	20	20				SPARE
SPARE				20	21	22	20				SPARE
SPARE				20	23	24	20				SPARE
SPARE				20	25	26	20				SPARE
SPARE				20	27	28	20				SPARE
SPARE				20	29	30	20				SPARE
SUBTOTAL	5420	3720	3280					5800	4200	3350	SUBTOTAL

NOTES:

TOTAL PANEL RECPT LOAD = 1260 WATTS

C.B. TYPE
S=SHUNT TRIP G=GFCI
L=LOCK ON C.B. H=HACR C.B.
AF=AFCI

TOTAL WATTS L1: 11220
TOTAL WATTS L2: 7920
TOTAL WATTS L3: 6630
TOTAL WATTS: 25770
TOTAL AMPS @ 100%: 72 AMPS
TOTAL AMPS @ 125%: 90 AMPS

PANELBOARD: LPKT (THATCHER)

BUS SIZE: 100 AMPS
VOLTAGE: 208 Y/120V 3PH,4W
NEUTRAL: (X)100% ( )200% ( )NONE
ISOLATED GND BUS: ( )YES (X)NO
SHORT CIR. CURRENT RATING 22K
MAIN: ( )MCB (X)MLO
MCB AMPS:
LOCATION: 013
MOUNTING: SURFACE
TVSS: ( )YES (X)NO
SERVICE RATED: ( )YES (X)NO

DIRECTORY	WATTS OF LOAD L1	L2	L3	CKT BKR AMPS	POLES		CKT BKR AMPS	WATTS OF LOAD L1	L2	L3	DIRECTORY
ERU-1T (SUPPLY)	812			20	1	2	50	3600			RECPT - COOKTOP - KITCHEN
ERU-1T (EXHAUST)		812			3	4			3600		
RECPT - WALL OVEN - KITCHEN			2500	30	5	6	20			1500	RECPT - KITCHEN
	2500				7	8	20	1500			RECPT - KITCHEN
RECPT - MICROWAVE - KITCHEN		1500		20	9	10	20G		1500		RECPT - REFRIGERATORS - KITCHEN
JUNCTION - HOOD - KITCHEN			500	20	11	12	20			1500	RECPT - VENDING MACHINE
RECPT - VENDING MACHINE	1500			20	13	14	20	1080			RECPT - COMMON 015
RECPT - COMMON 015		1130		20	15	16	20		1500		HAND DRYER - WOMEN 014
HAND DRYER - MEN 012			1500	20	17	18	20			360	RECPT - WOMEN 014
RECPT - MEN 012	720			20	19	20	20	100			BAS PANEL - 004A
RECPT - MICROWAVE - KITCHEN		1500		20	21	22	20		1176		JUNCTION - DISPOSAL - KITCHEN
SPARE				20	23	24	20				SPARE
SPARE				20	25	26	20				SPARE
SPARE				20	27	28	20				SPARE
SPARE				20	29	30	20				SPARE
SUBTOTAL	5532	4942	4500					6280	7776	3360	SUBTOTAL

NOTES:

TOTAL PANEL RECPT LOAD = 6290 WATTS

C.B. TYPE
S=SHUNT TRIP G=GFCI
L=LOCK ON C.B. H=HACR C.B.
AF=AFCI

TOTAL WATTS L1: 11812
TOTAL WATTS L2: 12718
TOTAL WATTS L3: 7860
TOTAL WATTS: 32390
TOTAL AMPS @ 100%: 90 AMPS
TOTAL AMPS @ 125%: 113 AMPS

DRAWING NOTES

1. THE FOLLOWING NOTES ONLY APPLY TO THIS DRAWING.
2. REFER TO GENERAL NOTES, ELECTRICAL TRADE NOTES, LEGEND AND ABBREVIATIONS ON DRAWING ET1.0.

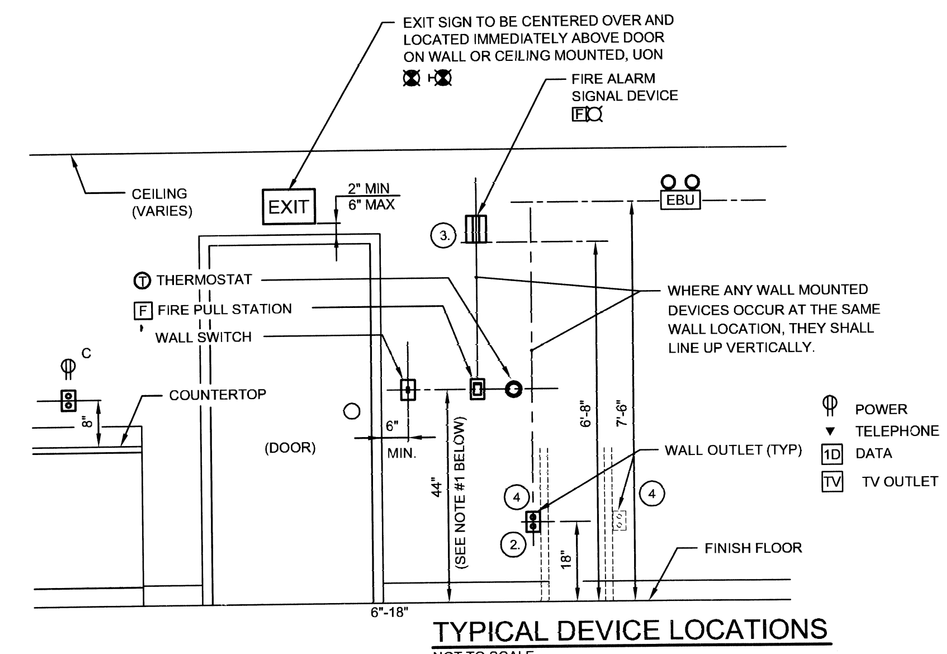

TYPICAL DEVICE LOCATIONS

NOT TO SCALE

NOTE:

1 HEIGHT GIVEN FOR THIS DEVICE IS THE MAXIMUM HEIGHT TO THE HIGHEST OPERABLE PART OF THE DEVICE

2 WHERE ELECTRICAL DEVICES ARE LOCATED ON EXTERIOR WALLS ABOVE FINTUBE, MOUNT DEVICES ABOVE FINTUBE. MOUNTING HEIGHT SHALL BE MINIMUM 18" AFF OR 4" ABOVE TOP OF FINTUBE ENCLOSURE. COORDINATE FINTUBE LOCATIONS, SIZE AND MOUNTING HEIGHT WITH MECHANICAL CONTRACTOR.

3 MOUNT SIGNAL DEVICE WITH BOTTOM OF LENS AT 80" AFF.

4 WHERE LOCATED ON OPPOSITE SIDES OF COMMON WALLS, DEVICE BOXES SHALL NOT BE INSTALLED BACK-TO-BACK IN THE SAME STUD BAY. WHERE POSSIBLE, ALL BOXES SHALL BE ONE COMPLETE STUD BAY APART.

5 COORDINATE LOCATIONS OF WAINSCOTING RECEPTACLES WITH ARCHITECTURAL DRAWINGS TO CENTER DEVICES IN PANEL FINISH.

6 COORDINATE ACTUAL LOCATIONS OF NEW AND RELOCATED EXIT SIGNS WITH THE ARCHITECTURAL DRAWINGS & DETAILS.

7 ELECTRICAL DEVICE LOCATIONS SHOWN ON THE ARCHITECTURAL DRAWINGS SHALL HAVE PRECEDENT OVER ELECTRICAL DRAWINGS. COORDINATE ACTUAL LOCATIONS WITH ARCHITECTURAL DETAILS.

ELECTRIC EQUIPMENT AND CONTROL SCHEDULE

EQUIPMENT: ITEM NUM.	NAME	ROOM LOC.	HP.	KW.	PHASE	SYSTEM VOLTS	SUPPLY: PANEL OR CONTROL CENTER	CIRCUIT BREAKER	POWER WIRING FROM PANEL TO CONTROL UNIT AND FROM CONTROL UNIT TO EQUIPMENT: PHASE	GND	CONDUIT	REF. NOTES	ACCESSORIES: DISCONNECT SWITCH	CONTROL DEVICES NOTES
ERU-1T (SUPPLY)	ENERGY RECOVERY UNIT	THATCHER 015B	1/2		1	208	LPKT	20/2	2#12	1#12G	3/4"C	B	FACTORY	1
ERU-1T (EXHAUST)	ENERGY RECOVERY UNIT	THATCHER 015B	1/6		1	208	FED WITH ERU-1T (SUPPLY)	-	2#12	1#12G	3/4"C	-	-	-
ERU-2T (SUPPLY)	ENERGY RECOVERY UNIT	THATCHER 005A	1/2		1	208	LP	20/2	2#12	1#12G	3/4"C	B	FACTORY	1
ERU-2T (EXHAUST)	ENERGY RECOVERY UNIT	THATCHER 005A	1/6		1	208	FED WITH ERU-2T (SUPPLY)	-	2#12	1#12G	3/4"C	-	-	-
EF-1T	FAN	THATCHER 005B		0.08	1	120	LP	20/1	2#12	1#12G	3/4"C	I	PROVIDE	1
EF-2T	FAN	THATCHER 004A	1/2		1	120	LP	20/1	2#12	1#12G	3/4"C	I	FACTORY	1
EF-3T	FAN	THATCHER 014		0.08	1	120	WIRE WITH LIGHTING	-	2#12	1#12G	3/4"C	J	PROVIDE	1
EF-4T	FAN	THATCHER 012		0.08	1	120	WIRE WITH LIGHTING	-	2#12	1#12G	3/4"C	J	PROVIDE	1
SF-1T	FAN	THATCHER 009B	3/4		3	208	LPLT	15/3	3#12	1#12G	3/4"C	B	FACTORY	7
CUH-1T	CABINET UNIT HEATER	THATCHER 014	1/15		1	120	FED WITH EF-1T	-	2#12	1#12G	3/4"C	I	FACTORY	1
CUH-2T	CABINET UNIT HEATER	THATCHER 012	1/15		1	120	FED WITH EF-1T	-	2#12	1#12G	3/4"C	I	FACTORY	1
AC-1.1	MINI SPLIT A/C	THATCHER 105		-	1	208	FED WITH ACC-1	-	2#12	1#12G	3/4"C	C	PROVIDE	1
AC-1.2	MINI SPLIT A/C	THATCHER 107		-	1	208	FED WITH ACC-1	-	2#12	1#12G	3/4"C	C	PROVIDE	1
ACC-1	MINI SPLIT A/C	EXTERIOR		1.8	1	208	LP	15/2	2#12	1#12G	3/4"C	A,G	PROVIDE	4

GENERAL NOTES:
1. ALL ACCESSORIES PROVIDED BY THE DIVISION 16 CONTRACTOR. UON
2. ALL CONTROL DEVICES ARE TO BE SURFACE MOUNTED, UNLESS OTHERWISE NOTED.
3. PROVIDE OVERLOADS. SIZE AS REQUIRED, BY THE DIVISION 16 CONTRACTOR
4. IF DIFFERENT THAN INDICATED ON THIS SCHEDULE OR PANELBOARD SCHEDULE, PROVIDE NEW CIRCUIT BREAKER IN DESIGNATED PANELBOARD SIZED PER EQUIPMENT NAMEPLATE DATA.

REFERENCE NOTES:
A. PROVIDE PROPERLY SIZED DISCONNECT SWITCH
B. SINGLE-POINT CONNECTION; COORDINATE WITH MECHANICAL CONTRACTOR
C. PROVIDE TOGGLE SWITCH IN 4" SQUARE BOX FOR EQUIPMENT SERVICE DISCONNECT
D. UNIT PROVIDED WITH FACTORY MOUNTED DISCONNECT SWITCH
E. INSTALL MOTOR STARTER RELAY, SUPPLIED BY MECHANICAL CONTRACTOR
F. UNIT INSTALLED ABOVE CEILING
G. PROVIDE 2-#10,1-#10EG,3/4"CONDUIT FROM OUTDOOR UNIT TO INDOOR UNIT AND TERMINATE WIRING AS REQUIRED
H. UNIT PROVIDED WITH FACTORY MOUNTED DISCONNECT SWITCH AND CONTACTOR
I. CIRCUITED WITH OTHER EQUIPMENT, SEE PANEL SCHEDULE
J. WIRE TO OCCUPANCY SENSOR CONTROLLED LIGHT FIXTURE TO OPERATE WHEN THE LIGHT IS "ON"

CONTROL DEVICES NOTES

1. MANUAL MOTOR STARTER
2. COMBINATION MAGNETIC STARTER
3. VARIABLE SPEED DRIVE *
4. PACKAGED CONTROL UNIT
5. FIRE ALARM FAN SHUT DOWN
6. BOILER SHUTDOWN SWITCH & THERMAL CUTOUT
7. COMBINATION VFD *

* SUPPLIED BY MECHANICAL CONTRACTOR, INSTALLED AND WIRED BY ELECTRICAL CONTRACTOR

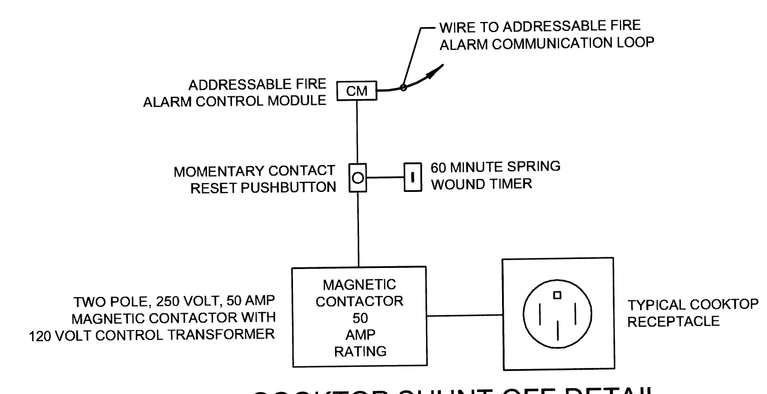

COOKTOP SHUNT OFF DETAIL

NOT TO SCALE

NOTE:

1 PUSH BUTTON START OPERATION WITH TIMER OVERRIDE CONTROL.

2 FIRE ALARM CONTROL MODULE PROGRAMMED TO OPEN CONTROL CIRCUIT UPON HEAT DETECTOR OR WATER FLOW INITIATION.

0 5 10 15 20 FT

PLAN NORTH
N

12 DECEMBER 2011

REV. NO.	DESCRIPTION	BY	APP'D	DATE

UNIVERSITY OF MASSACHUSETTS
FACILITIES PLANNING DIVISION

THATCHER HALL
FINISH UPGRADE 2012
PANELBOARD SCHEDULES, EQUIPMENT SCHEDULE & DETAILS

	BY	DATE	PROJECT NO. 10-00178501	CONTRACT NO. UMA 12-18
DRN.	CRN		SCALE NO SCALE	SHEET OF
APP'D	LJE			
CKD.			DRAWING NUMBER LEWIS	ET6.1
APP'D				

RFS engineering
Rist Frost Shumway Engineering, P.C.
71 Water St
Laconia, NH 03246
P: 603.524.4647
F: 603.528.7653
www.rfsengineering.com

COMMONWEALTH OF MASSACHUSETTS
CHRISTOPHER M. SHUMWAY
MECHANICAL
No. 41765
REGISTERED PROFESSIONAL ENGINEER

THIS DOCUMENT IS PREPARED BY RIST-FROST-SHUMWAY AS AN INSTRUMENT OF SERVICE AND MAY NOT BE USED, REPRODUCED, DISSEMINATED OR TRANSMITTED IN ANY MANNER INCLUDING ELECTRONICALLY, IN WHOLE OR IN PART, FOR ANY REASON OTHER THAN FOR THE SPECIFIC PROJECT AND PURPOSE FOR WHICH RIST-FROST-SHUMWAY PRODUCED WITHOUT THE EXPRESS WRITTEN PERMISSION OF RIST-FROST-SHUMWAY ENGINEERING, INC.

© 2011 LEERS WEINZAPFEL ASSOCIATES ARCHITECTS INC.