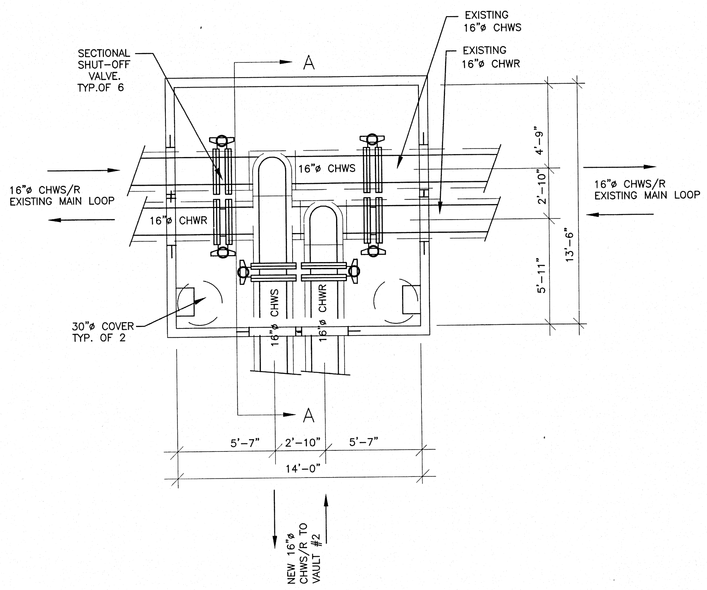

VAULT #1 PIPE SCHEMATIC PLAN

SCALE: 1/4"=1'-0"

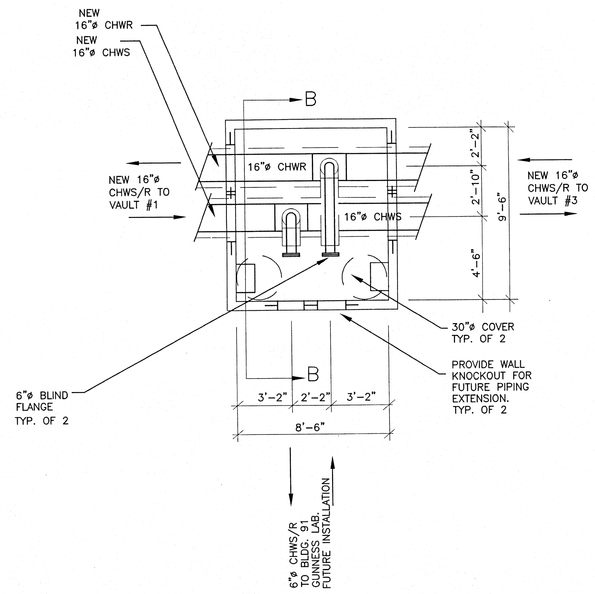

VAULT #2 PIPE SCHEMATIC PLAN

SCALE: 1/4"=1'-0"

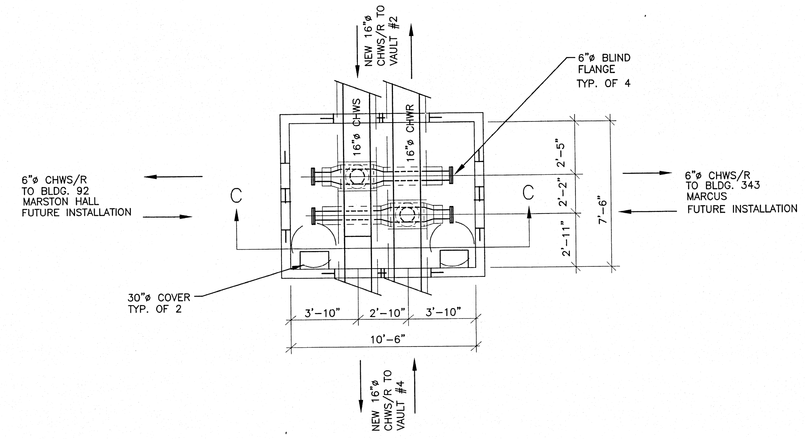

VAULT #3 PIPE SCHEMATIC PLAN

SCALE: 1/4"=1'-0"

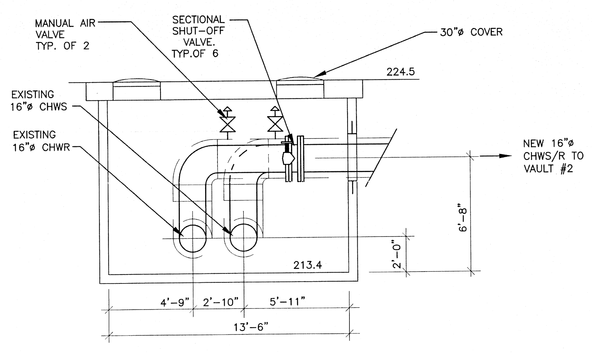

VAULT #1 SECTION A-A

SCALE: 1/4"=1'-0"

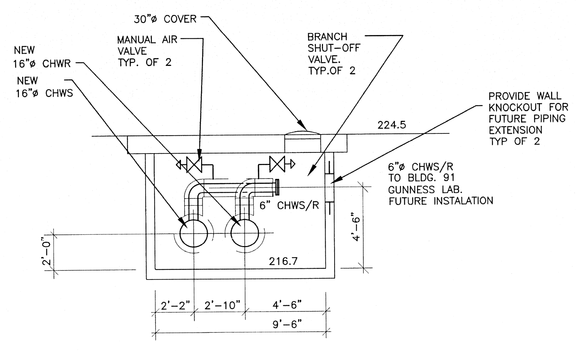

VAULT #2 SECTION B-B

SCALE: 1/4"=1'-0"

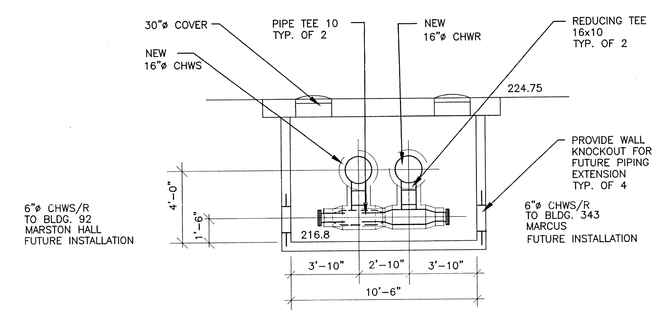

VAULT #3 SECTION C-C

SCALE: 1/4"=1'-0"

dtc

DIVERSIFIED TECHNOLOGY CONSULTANTS

2321 WHITNEY AVENUE HAMDEN CT 06518
203 239 4200 203 234 7375 FAX

305 N. MAIN STREET SUITE 202 ANDOVER MA 01810
978 475 2935 978 475 2936 FAX

NO.		BY	APP'D	DATE

UNIVERSITY OF MASSACHUSETTS
FACILITIES PLANNING DIVISION

UTILITIES, NORTHWEST
CHILLED WATER LOOP PHASE 1

MECHANICAL DETAILS

	DRN.	DATE	PROJECT NO. UMA 11-000607-08	CONTRACT NO. UMA 12-20
DRN.	MT	11/18/11	SCALE AS NOTED	SHEET 14 OF 20
APP'D	GHK	11/18/11	DRAWING NUMBER	M.02
CKD.	GHK	11/18/11		
APP'D	DGC	11/18/11		

COMMONWEALTH OF MASSACHUSETTS
GEORGE H. KIRBY
No. 48349
REGISTERED PROFESSIONAL ENGINEER
11/18/2011

BID DOCUMENTS 11/18/11