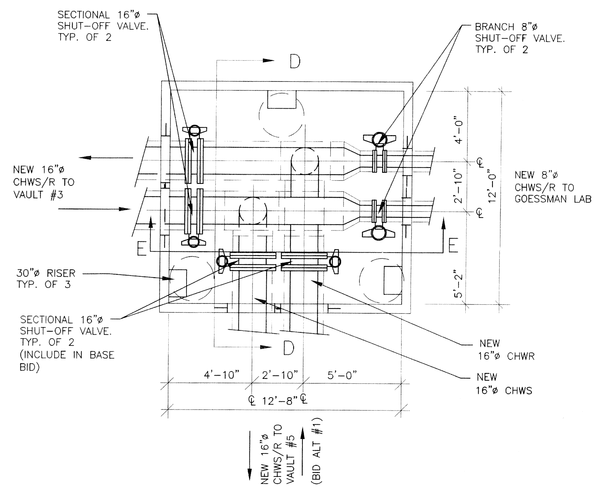

VAULT #4 PIPE SCHEMATIC PLAN
N.T.S.

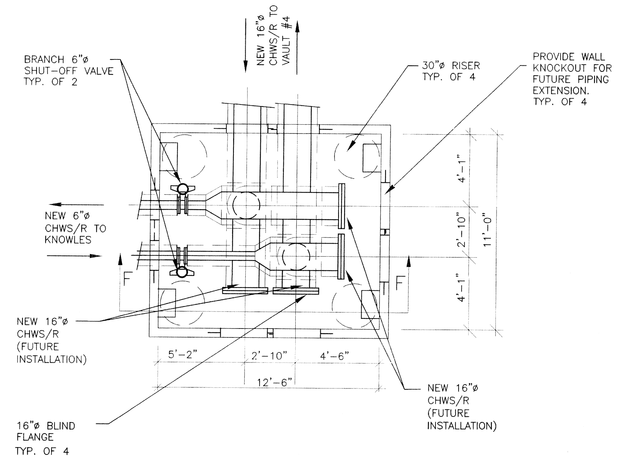

VAULT #5 PIPE SCHEMATIC PLAN
N.T.S.

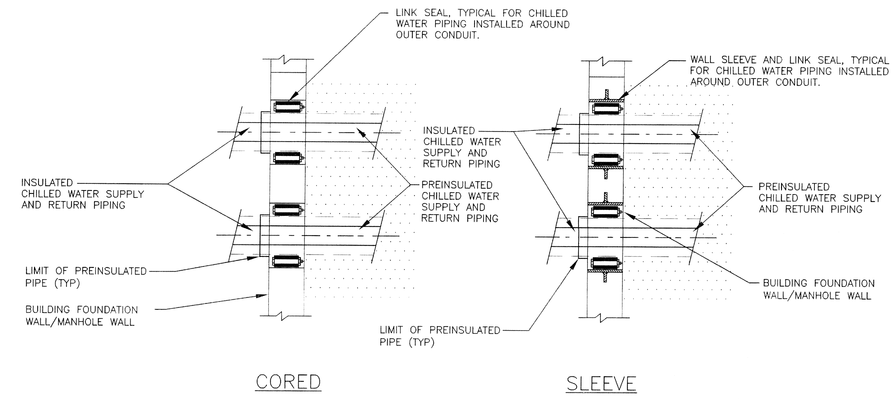

MANHOLE/FOUNDATION WALL PENETRATION DETAIL
NTS

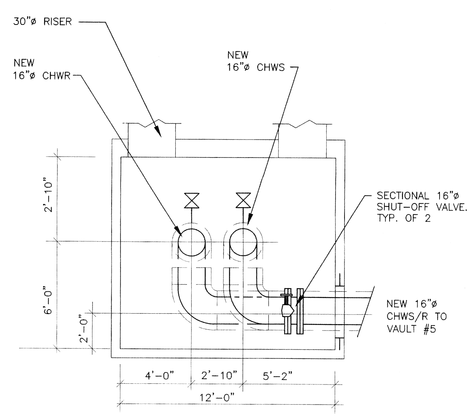

VAULT #4 SECTION D-D
N.T.S.

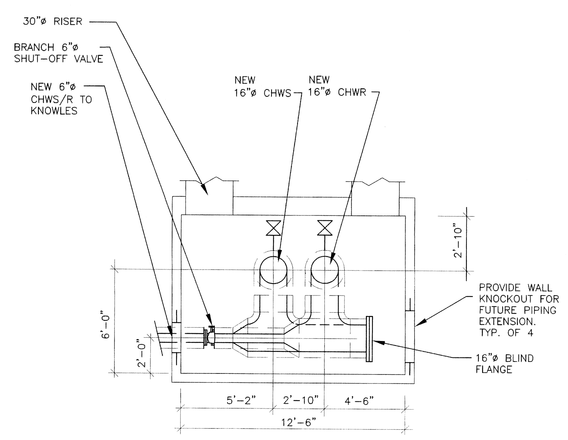

VAULT #5 SECTION F-F
N.T.S.

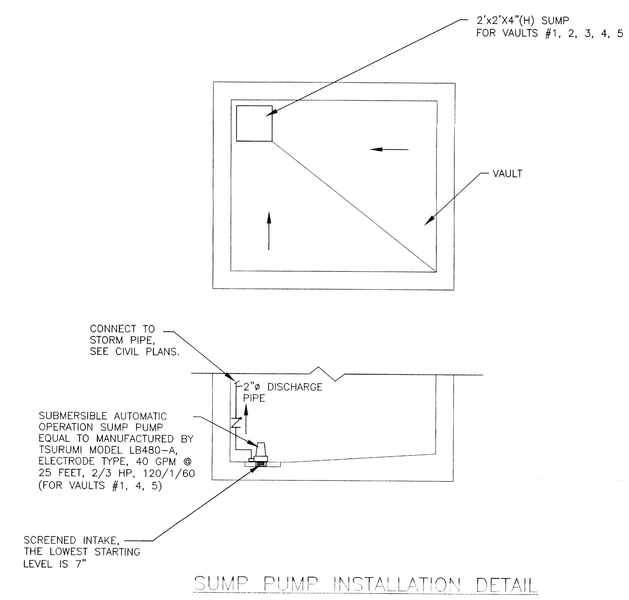

SUMP PUMP INSTALLATION DETAIL
NTS

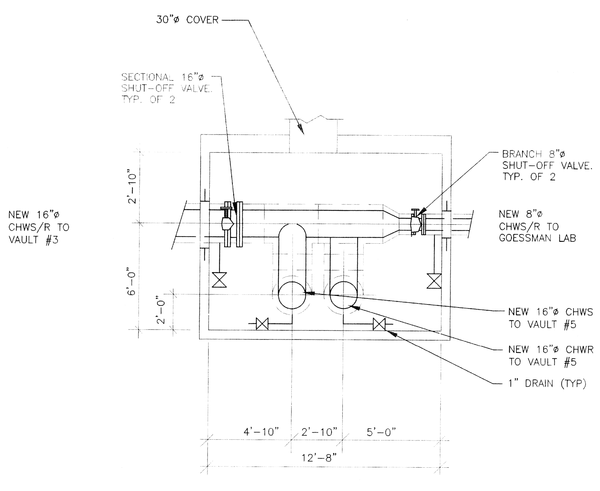

VAULT #4 SECTION E-E
N.T.S.

dtc

DIVERSIFIED TECHNOLOGY CONSULTANTS
2321 WHITNEY AVENUE HAMDEN CT 06518
203 239 4200 203 234 7376 FAX
305 N. MAIN STREET SUITE 202 ANDOVER MA 01810
978 475 2930 978 475 2936 FAX

NO.		BY	APP'D	DATE
1	ADDENDUM #01	A.M.	H.K.	12/22/11

UNIVERSITY OF MASSACHUSETTS
FACILITIES PLANNING DIVISION

UTILITIES, NORTHWEST
CHILLED WATER LOOP PHASE 1
MECHANICAL DETAILS

	DRN.	DATE	PROJECT NO. UMA II-000607-01	CONTRACT NO. UMA 12-20
DRN.	AM	12/21/11	SCALE AS NOTED	SHEET 15 OF 20
APP'D	GHK	12/21/11		
CKD.	PAS	12/21/11	DRAWING NUMBER	M.03
APP'D	DSC	12/22/11		

BID DOCUMENTS 11/18/11